DIST.	COUNTY	ROUTE	SECTION	SHEET NO.	TOTAL SHEETS
VIII	SBd	43	SBd		

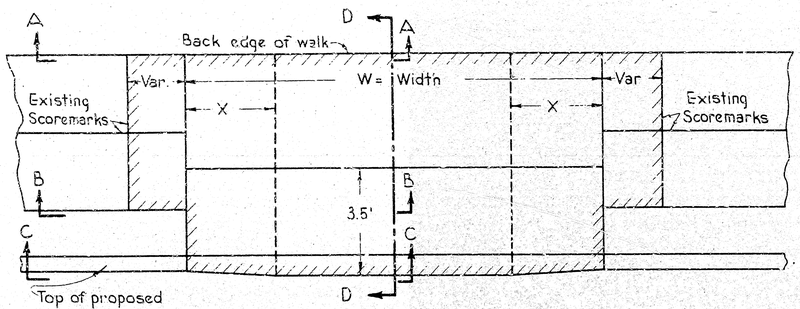

PLAN FOR DRIVEWAYS

Scale 1" = 2'

SUMMARY OF DRIVEWAYS			
Left Side		Right Side	
Approx. ℄ Sta.	Width W	Approx. ℄ Sta.	Width W
285+20	20	285+70	32
		288+50	32
		289+28	20
		289+70	32

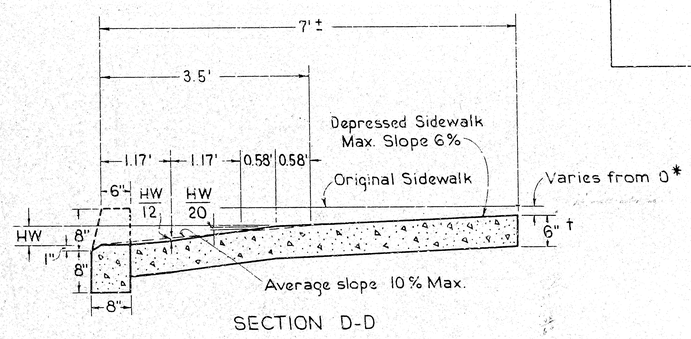

SECTION D-D

Scale: 1" = 1'

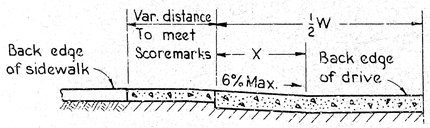

SECTION A-A

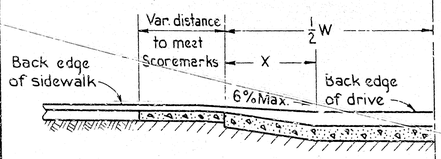

SECTION B-B

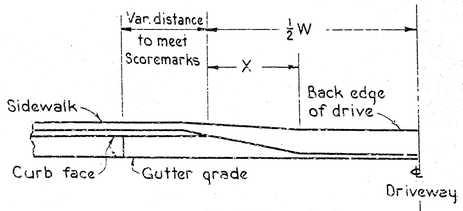

SECTION C-C

Scale: 1" = 2'

* Where necessary, to meet maximum slopes of 6% on depressed sidewalk & 10% average on Ramp, depress back edge of walk as shown in Section A-A

† Where an existing sidewalk is in place which is less than 6 inches in thickness, that portion of such sidewalk within the limits of a driveway shall be removed and replaced with Portland Cement Concrete 6 inches in thickness and conforming to Standard Specifications.

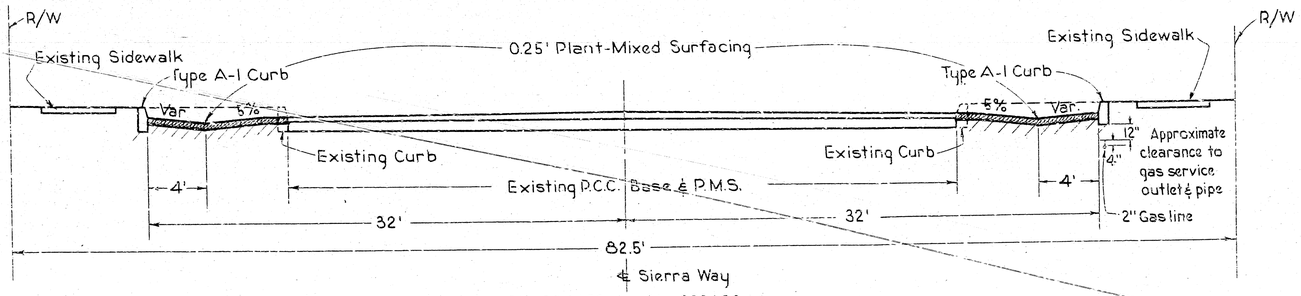

Sta. 284+53 to Sta. 290+36

VIII - SBD-43-SBD

SIERRA WAY BETWEEN RALSTON AVENUE AND FORTIETH STREET

TYPICAL CROSS SECTION

Scale 1" = 4'

DIST.	COUNTY	ROUTE	SECTION	SHEET NO.	TOTAL SHEETS
VIII	SBd	43	SBd		

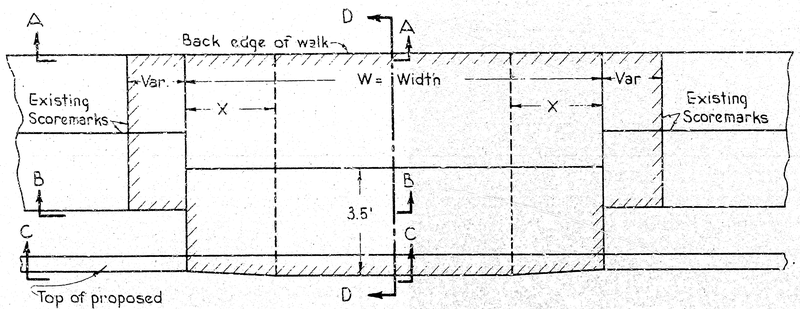

PLAN FOR DRIVEWAYS

Scale 1" = 2'

SUMMARY OF DRIVEWAYS			
Left Side		Right Side	
Approx. ℄ Sta.	Width W	Approx. ℄ Sta.	Width W
285+20	20	285+70	32
		288+50	32
		289+28	20
		289+70	32

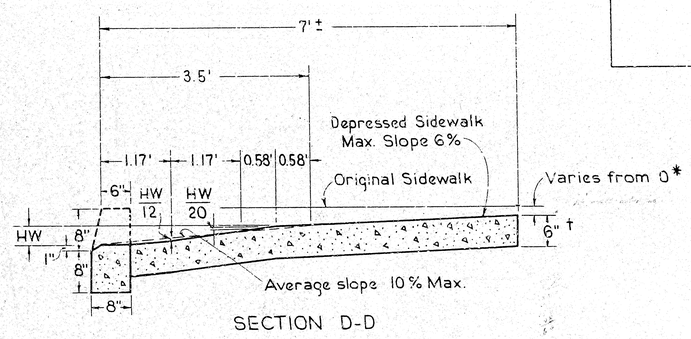

SECTION D-D

Scale: 1" = 1'

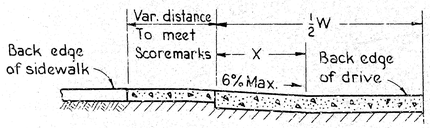

SECTION A-A

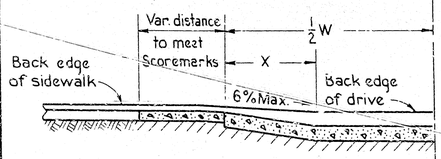

SECTION B-B

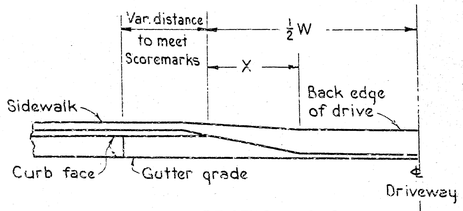

SECTION C-C

Scale: 1" = 2'

* Where necessary, to meet maximum slopes of 6% on depressed sidewalk & 10% average on Ramp, depress back edge of walk as shown in Section A-A

† Where an existing sidewalk is in place which is less than 6 inches in thickness, that portion of such sidewalk within the limits of a driveway shall be removed and replaced with Portland Cement Concrete 6 inches in thickness and conforming to Standard Specifications.

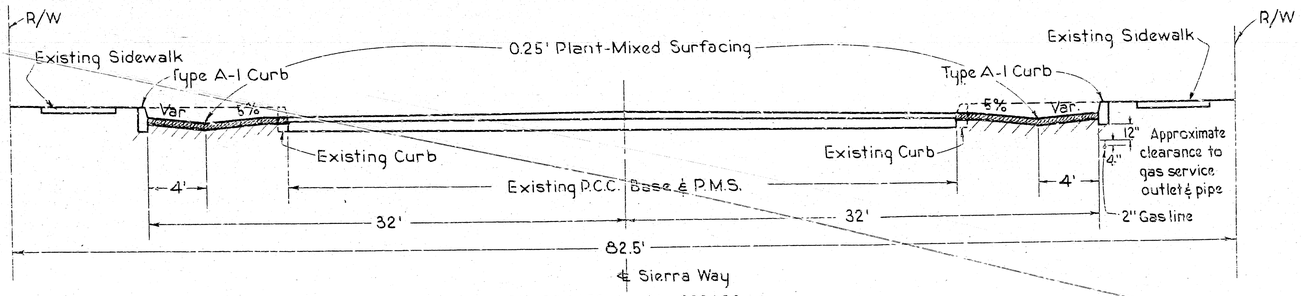

Sta. 284+53 to Sta. 290+36

VIII - SBD-43-SBD

SIERRA WAY BETWEEN RALSTON AVENUE AND FORTIETH STREET

TYPICAL CROSS SECTION

Scale 1" = 4'